# Product data sheet Spirotech

## Product name

## EMCK Maxi 300L max 5,6bar

## Article number

## EMCK-M300-5.6

## Product properties

The MultiControl Kompakt MAXI is an automatic expansion and pressure-maintaining device, with 2 pumps (2x 100%) and an overflow valve. An unpressurised expansion tank is integrated.

- contains 2 pumps (2x 100%)
- contains 1 overflow valve (1x 100%)
- Operational pressure range up to 8.1 bar
- Comes with vessel volumes from 45 to 500 liters
- Two further vessels can be added.
- Maximum expansion volume: 75 – 1,500 litres
- The maximum temperature at the point of connection: 70°C (over 70°C possible with auxiliary tank)
- Maximum safety temperature in the system: 110°C
- Maximum operating pressure (PN): 10 bar

## Product image

## Product dimensions

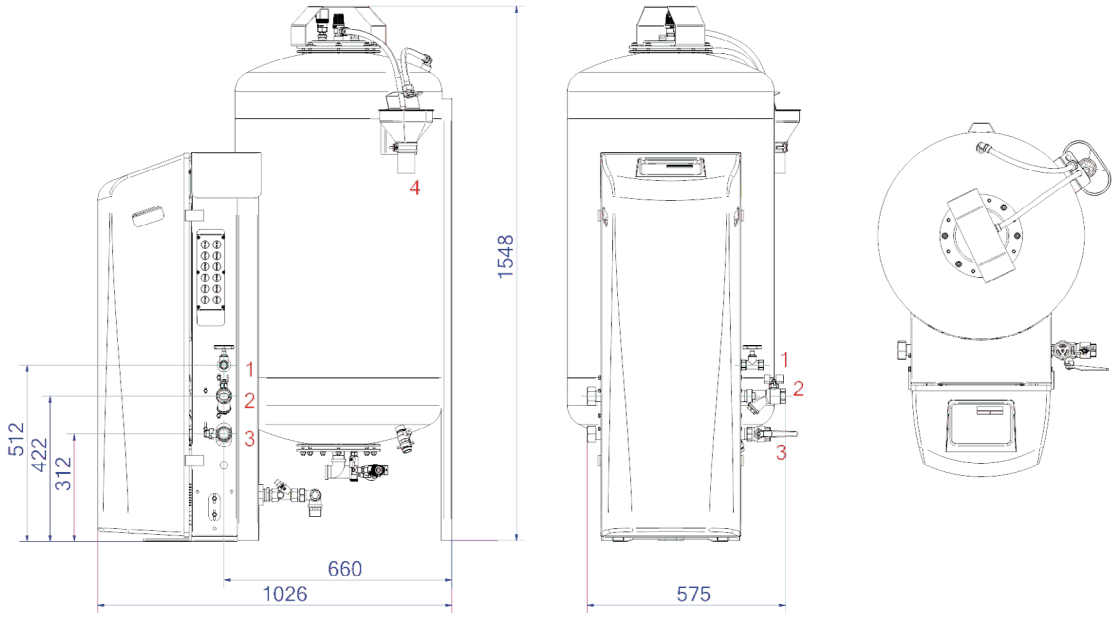


| | | | |
|---|---|---|---|
| **1. Refill connection** | Rp1/2 | **3. Expansion pressure pipe** | Rp1 |
| **2. Expansion overflow pipe** | Rp1 | **4. Drain funnel tank safety valve** | DN50 Geberit |

# Product data sheet Spirotech

## ETIM product data

| | |
|---|---|
| **Height** | 1577 mm |
| **Volume** | 300 l |
| **Max. operating pressure** | 5.6 bar |
| **Connection** | Other |
| **Power consumption** | 1.1 kW |
| **Couplable** | Yes |
| **Electrical connection** | Connection cable with plug |
| **Function master/slave** | No |
| **With pressure expansion vessel** | Yes |

| | |
|---|---|
| **Digital control unit** | Yes |
| **Double pump/compressor unit** | Yes |
| **With exchangeable membrane** | Yes |
| **Compressor in base** | No |
| **Nominal diameter expansion connection** | 1 inch (25) |
| **Max. medium temperature (continuous)** | 70 °C |
| **Horizontal positioning** | No |
| **Connection voltage** | 230 V |
| **Article pressure rating** | PN 10 |

**Disclaimer**
This product sheet has been compiled with the greatest possible care. Nevertheless, it may contain errors or omissions. For the most current and correct information we refer you to our website.