Product data sheet Spirotech

Product name

EMCK Maxi 125L max 8,1bar

Article number

EMCK-M125-8.1

Product properties

The MultiControl Kompakt MAXI is an automatic expansion and pressure-maintaining device, with 2 pumps (2x 100%) and an overflow valve. An unpressurised expansion tank is integrated.

- contains 2 pumps (2x 100%)
- contains 1 overflow valve (1x 100%)
- Operational pressure range up to 8.1 bar
- Comes with vessel volumes from 45 to 500 liters
- Two further vessels can be added.
- Maximum expansion volume: 75 – 1,500 litres
- The maximum temperature at the point of connection: 70°C (over 70°C possible with auxiliary tank)
- Maximum safety temperature in the system: 110°C
- Maximum operating pressure (PN): 10 bar

Product image

Product dimensions

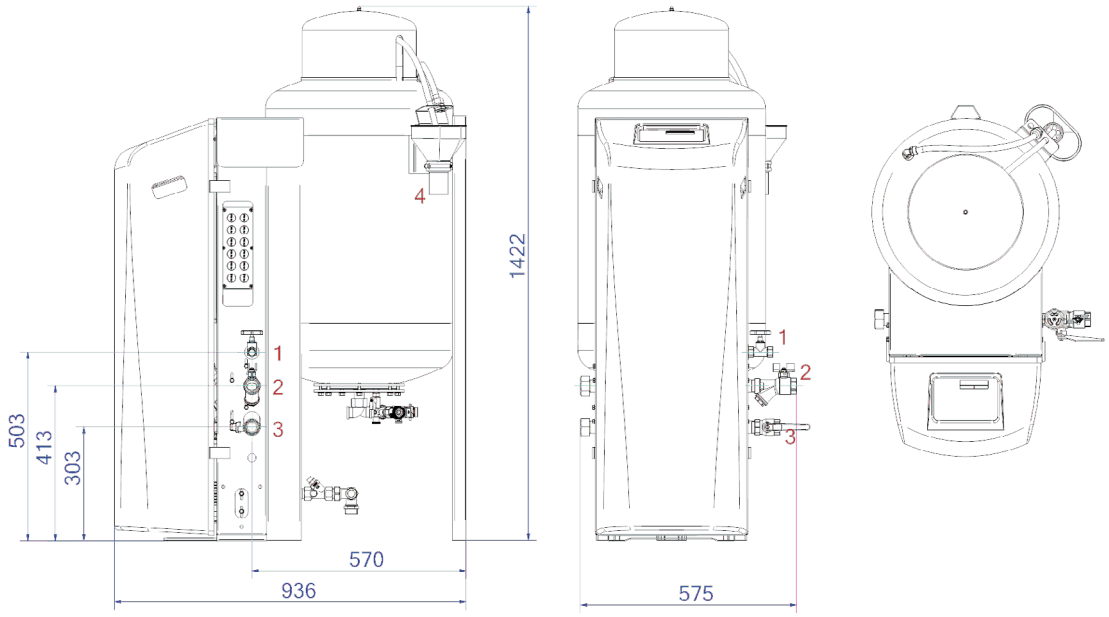

1. Refill connection	Rp1/2	**3. Expansion pressure pipe**	Rp1
2. Expansion overflow pipe	Rp1	**4. Drain funnel tank safety valve**	DN50 Geberit

Product data sheet Spirotech

ETIM product data

Height	1405 mm
Volume	125 l
Max. operating pressure	8.1 bar
Connection	Other
Power consumption	1.5 kW
Couplable	Yes
Electrical connection	Connection cable with plug
Function master/slave	No
With pressure expansion vessel	Yes

Digital control unit	Yes
Double pump/compressor unit	Yes
With exchangeable membrane	Yes
Compressor in base	No
Nominal diameter expansion connection	1 inch (25)
Max. medium temperature (continuous)	70 °C
Horizontal positioning	No
Connection voltage	230 V
Article pressure rating	PN 10

Disclaimer
This product sheet has been compiled with the greatest possible care. Nevertheless, it may contain errors or omissions. For the most current and correct information we refer you to our website.