Product data sheet Spirotech

Product name

SpiroCombi -DN80 -Flange -Demount

Article number

BD080F

Product properties

A demountable steel (microbubble) deaerator and dirt separator for standard flow rate (1.5 m/s) with a DN50 - DN300 PN16 flange connection

- Combined separation system - removes circulating air and microbubbles effectively
- Improve cost control and energy efficiency
- Applicable with 50/50 Ethylene Glycol / Water (Volume)
- Very small particles, from 5 µm (= 0.005 mm), are separated and removed
- Dirt can be discharged while the system is in operation
- We recommend equipping the separator with shut-off valves on both sides
- In case of severe pollution and/or maintenance, the unit is demountable
- Constant low pressure drop
- PN16 flange connections
- Connection diameters from DN50 - DN300, larger connection diameters on request
- Exceptional guarantee

Product image



Product dimensions

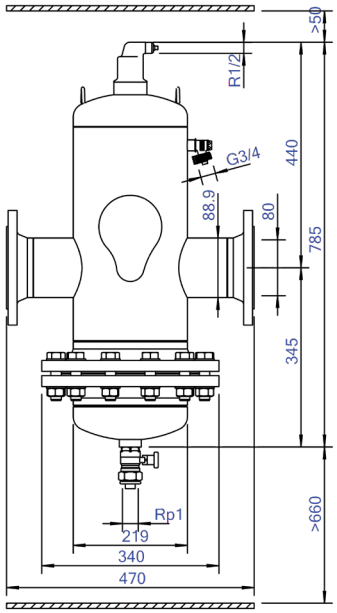

Product data sheet Spirotech

ETIM product data

Housing material	Steel
With drain tap	Yes
Housing material quality	St 37 (1.0254)
Backwash filter	No
Medium temperature (continuous)	0 - 110 °C
Max. operating pressure	10 bar
Kvs value	153.4 m^3/h
Variable flow direction	Yes
With insulation	No
Separator type	Air/dirt
Connection	Flange
Model	Horizontal
Nominal diameter	DN 80
Max. glycol mixture	50 %
Suitable for heating	Yes
Suitable for cooling	Yes
Construction length	470 mm

Article pressure rating	PN 10
Suitable for open system	No
Suitable for closed system	Yes
Suitable for solar	No
With dismountable filter	Yes
Filter volume	25 l
Magnet operating principle	No
With automatic de-aerator	Yes
Cleaning possible during operation	Yes
With couplers	No
Inlet/outlet offset distance	0 mm
Material of connection	Steel
Flow-through capacity	0 - 27 m^3/h
Flange standard	DIN
Surface protection housing	Lacquered
Flange pressure rating (PN)	PN 16

Disclaimer
This product sheet has been compiled with the greatest possible care. Nevertheless, it may contain errors or omissions. For the most current and correct information we refer you to our website.