Product data sheet Spirotech

Product name

SpiroVent -¾” -Hor -HighT

Article number

AA075/002

Product properties

A brass (microbubble) deaerator for high-temperature systems (max. 180 °C), with a 22 mm - 1½” horizontal connection

- Removes all circulating air and microbubbles effectively
- Applicable with 50/50 Glycol / Water (Volume)
- Applicable for high temperature system configurations
- Removes trapped air when installed at the correct location
- Greatly reduces the need for manual venting
- Constant low-pressure drop
- No unnecessary shutdown
- Connection diameters from 22 mm to 1½” (G1½)
- Exceptional guarantee

Product image



Product dimensions

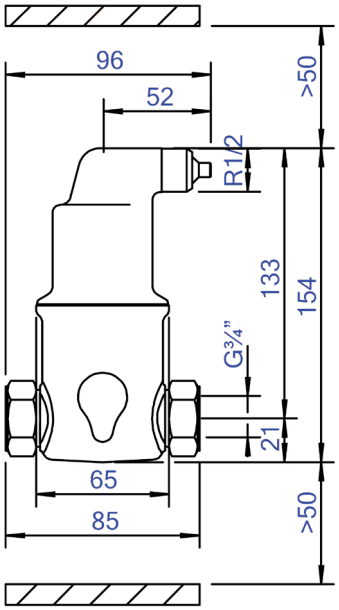

Product data sheet Spirotech

ETIM product data

Housing material	Brass
With drain tap	No
Housing material quality	Ms 58
Backwash filter	No
Medium temperature (continuous)	0 - 180 °C
Max. operating pressure	10 bar
Kvs value	10.96 m^3/h
Variable flow direction	Yes
With insulation	No
Separator type	Air
Connection	Internal thread cylindrical BSPP-G (ISO 228-1)
Model	Horizontal
Nominal diameter	3/4 inch (20)
Max. glycol mixture	50 %
Suitable for heating	Yes

Suitable for cooling	Yes
Construction length	85 mm
Article pressure rating	PN 10
Suitable for open system	No
Suitable for closed system	Yes
Suitable for solar	No
With dismountable filter	No
Filter volume	0.18 l
Magnet operating principle	No
With automatic de-aerator	Yes
With couplers	Yes
Inlet/outlet offset distance	0 mm
Material of connection	Brass
Material quality connection	Other
Flow-through capacity	0 - 1.3 m^3/h

Disclaimer
This product sheet has been compiled with the greatest possible care. Nevertheless, it may contain errors or omissions. For the most current and correct information we refer you to our website.